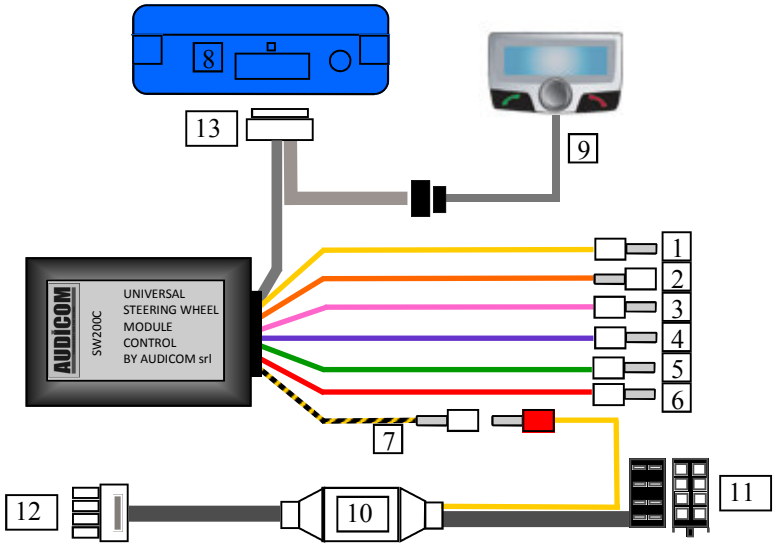

1	YELLOW = MUTE OUT connect to the radio mute cable
2	ORANGE = ignition lead + 15 connect to CK3100 orange wire
3	PINK = CAN BUS High line
4	VIOLET = **K-BUS DO NOT CONNECT**
5	GREEN = CAN BUS Low line
6	RED = connect to a positive
7	YELLOW /BLACK = MUTE IN to Parrot (10) yellow mute cable
8	PARROT CK 3100 UNIT
9	PARROT CK3100 DISPLAY
10	PARROT MUTE RELAY
11	LOUDSPEAKERS OUTPUT
12	TO PARROT CK3100 HANDS-FREE CAR KIT
13	TO PARROT CK3100 HANDS-FREE CAR KIT

CAN BUS AND MUTE WIRES POSITION

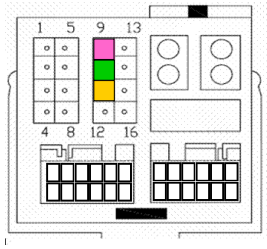

SEAT 2004-2008

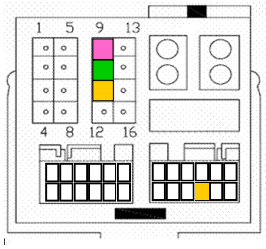

SEAT 2009>

CAN BUS L CAN BUS H MUTE
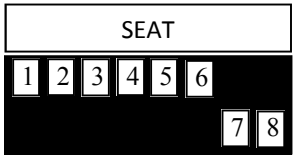
SWITCHES POSITION